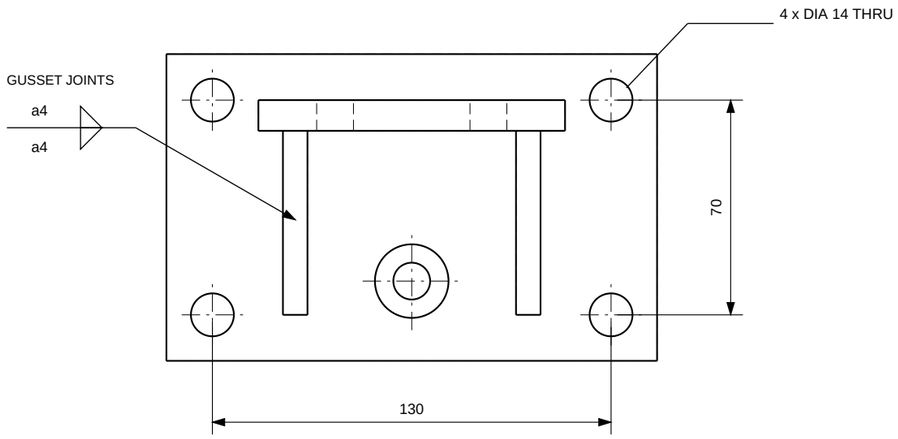

PLAN VIEW / 1:2

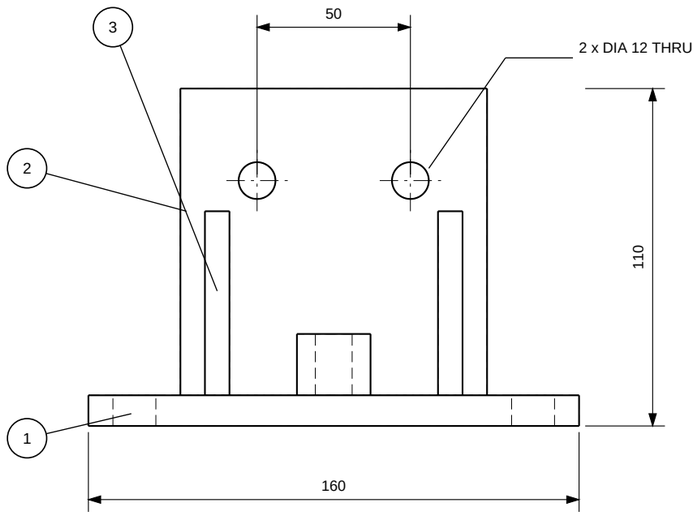

FRONT VIEW / 1:2

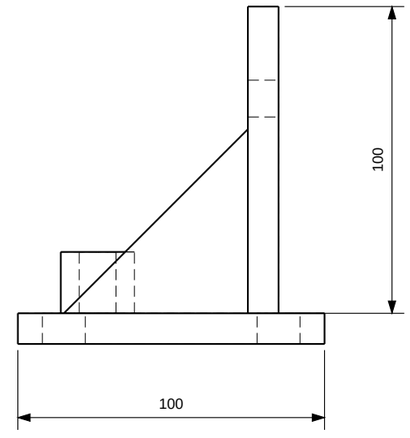

RIGHT VIEW / 1:2

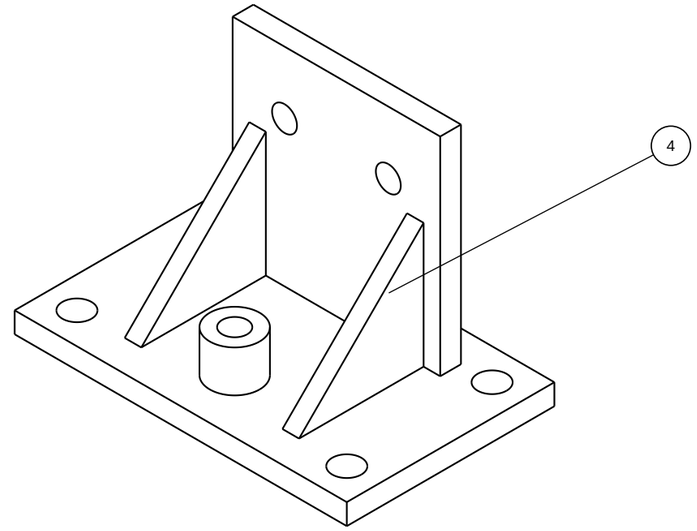

ISOMETRIC / EQUAL-AXIS PROJECTION

NOTES:

1. Base fixing holes are 15 mm from the adjacent plate edges.
2. Upright plate is centred across the 160 mm base width.
3. Spacer centre is 80 mm from the left edge and 26 mm from the front.
4. Gusset joints: continuous fillet welds, throat a = 4 mm, both sides.
5. Example weld quality requirement: ISO 5817 level C.
6. Review exercise only. No load capacity or production release is given.

PARTS LIST

POS	QTY	DESCRIPTION	MATERIAL
1	1	BASE PLATE 160 x 100 x 10	S355J2
2	1	UPRIGHT PLATE 100 x 100 x 10	S355J2
3	1	LEFT GUSSET 60 x 60 x 8	S355J2
4	1	RIGHT GUSSET 60 x 60 x 8	S355J2
5	1	SPACER DIA 24 / 12 x 20	S355J2

RHON LABS — **FIXTURE BRACKET**

ORIGINAL DEMO / NOT FOR PRODUCTION — DISCIPLINE: WELDING

RHON-DEMO-101 | REVISION: 01 | SCALE 1:2 | A3 | 1 / 1

THIRD-ANGLE ARRANGEMENT / DIMENSIONS IN mm

Review example: one parts-list item intentionally has no balloon.